450 XC USA 2007

SPARE PARTS MANUAL: CHASSIS

ART.NO.: 3CF8475G1EN

ENGLISH

INDEX

TELESCOPIC FORK

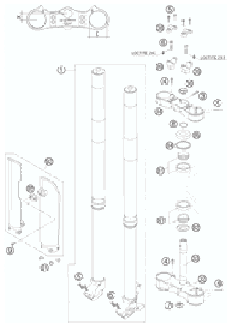

3

HANDLEBAR, CONTROLS

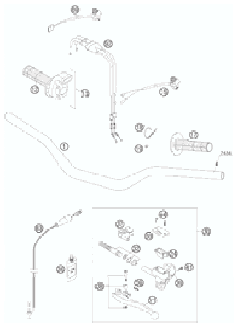

4

SIDE STAND

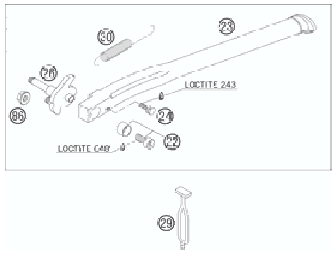

5

FRAME, SUB FRAME

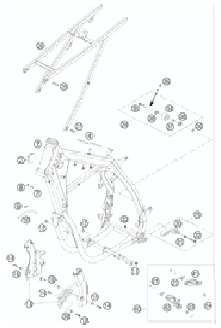

6

SWING ARM

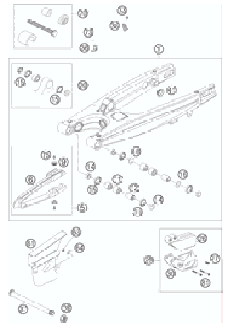

8

MONOSHOCK

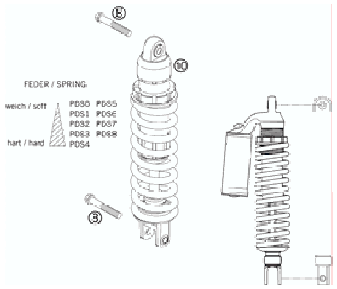

9

EXHAUST MANIFOLD

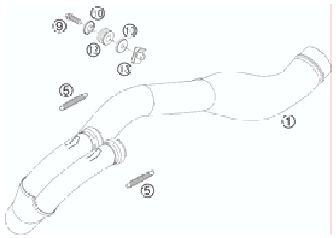

10

SILENCER

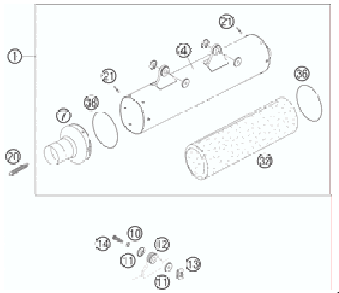

11

AIR FILTER BOX

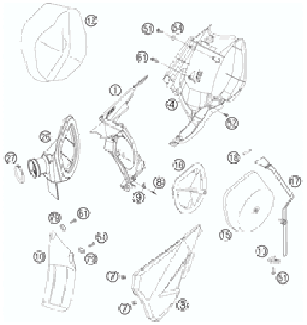

12

FUEL TANK, SEAT

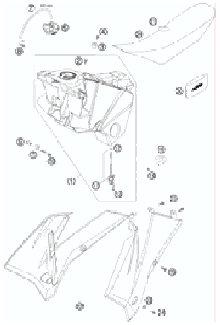

13

MASK, FENDERS

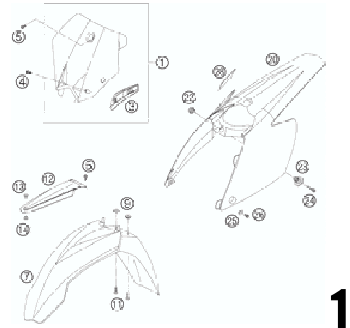

14

DECAL

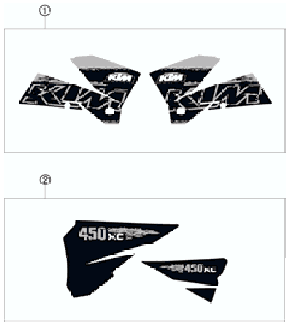

15

INDEX

FRONT WHEEL

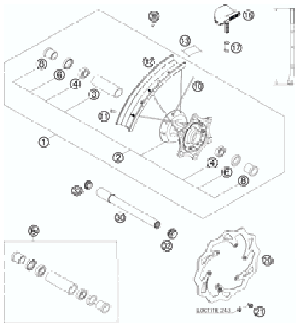

16

REAR WHEEL

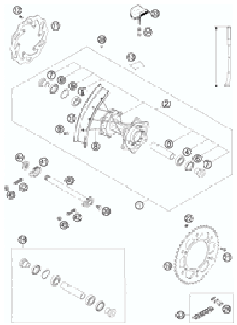

17

WIRING HARNESS

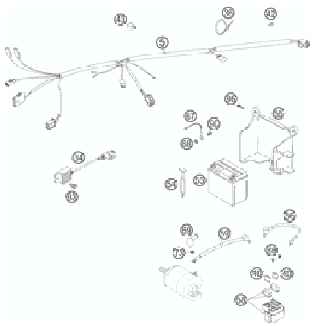

19

REAR BRAKE CALIPER

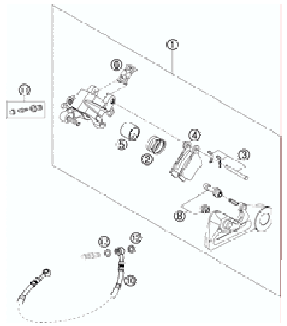

20

HAND BRAKE CYLINDER

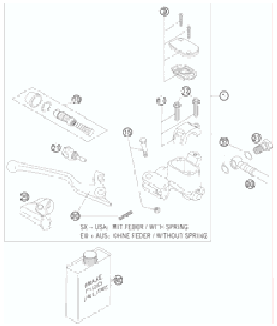

21

BRAKE CALIPER FRONT

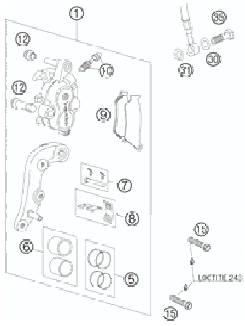

22

REAR BRAKE CONTROL

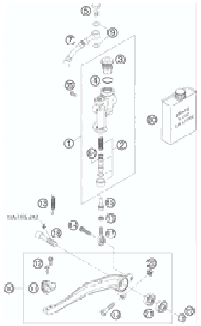

23

ACCESSORIES

24

All information contained is without obligation. KTM-Sportmotorcycle AG particularly reserves the right to modify any equipment, technical specifications, prices, colors, shapes, materials, services, service work, constructions, equipment and the like so as to adapt them to local conditions or to cancel any of the above items, all without previous announcement and without giving reasons. KTM may stop manufacturing certain models without previous notice. KTM shall not be held liable for any deviations of availability and/or ability to deliver, illustrations, descriptions, printing and/or other errors. The illustrated models partly contain extra equipment, which is not applied to standard models.

© 2004 by KTM-SPORTMOTORCYCLE AG, Mattighofen AUSTRIA; All rights reserved; Reprint, also in extracts, with written allowance of KTM-SPORTMOTORCYCLE AG, Mattighofen only.

TELESCOPIC FORK

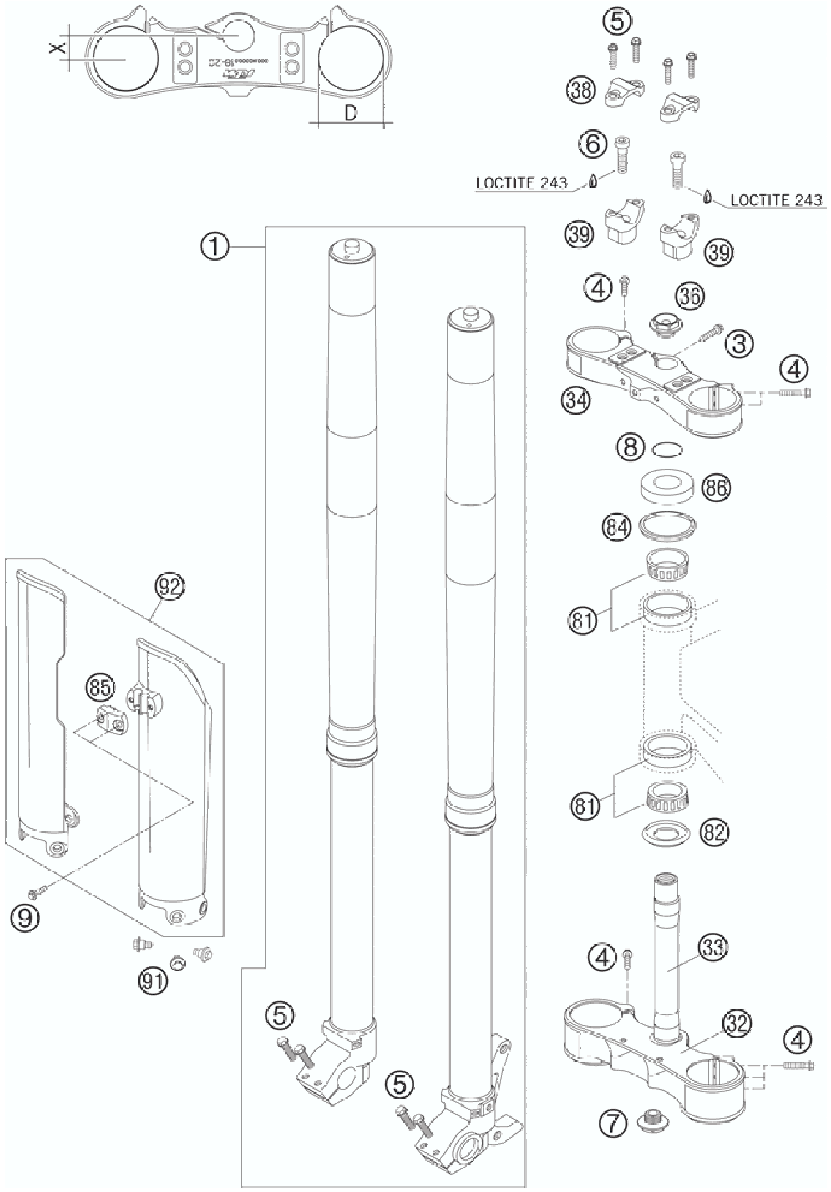

FIG	PART NUMBER	DESCRIPTION	QTY
1*	14187C29	FORK WP D48 450XC450-525SD 07	1
3	0015080256S	HH COLLAR SCREW M8X25 WS=10 06	1
4	0015080353	HH COLLAR SCREW M 8X35 WS=10	10
5	0015080253	HH COLLAR SCREW M 8X25 WS=10	8
6*	0912100356	AH SCREW DIN6912-M10X35 10.9	2
7*	54801036100	STE.HEAD SCR. M20X1,5 WS=27 SL SELF-LOCKING	1
8*	0770025035	O-RING 25X3,55 NBR70 05	1
9*	0017060204	EJOT PT SCREW K60X20 ALU WS=6	2
32*	59401031019	BOTTOM TRIPLE CLAMP D=60MM 05	1
33*	59401033000	FORK TUBE L=237MM 05	1
34*	59401034019	TOP TRIPLE CLAMP D=54MM 05	1
36	54801036000	STEER.HEAD SCREW M20X1,5 WS=27	1
38*	59401038000	HANDLEBAR CLAMP 28MM 05	2
39*	59401039032	HANDLEB.SUPP. D=28MM H=32MM 05	x
39*	59401039037	HANDLEB.SUPP. D=28MM H=37MM 05	2
39*	59401039042	HANDLEB.SUPP. D=28MM H=42MM 05	x
81	54201081100	TAPERED ROLLER BEARING CPL. 06	2
82	54601084100	O-RING SUPPORT W. SEALING LIP	1
84	54601184000	STEARING HEAD GASKET TOP	1
85	5900108510004	CLAMP F.SPEED.CABLE ORANGE 06	1
86	54201086000	STEERING HEAD COVER	1
91	59001092050	SPECIAL SCREW M6X12,5 WS=8	6
92	5900109400004	FORK PROT. L/S +R/S ORG 02	1

075900100 / C075900100

* NEW PART

X AS REQUIRED

HANDLEBAR, CONTROLS

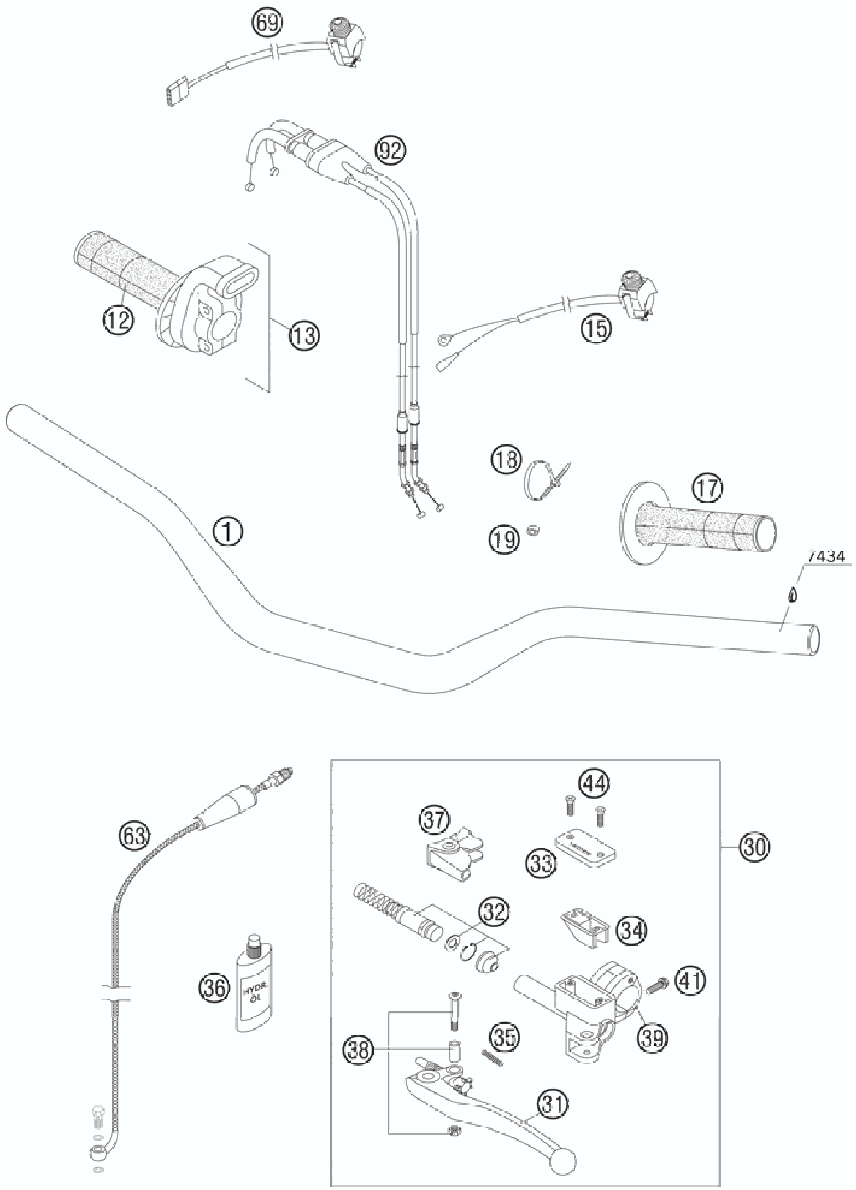

FIG	PART NUMBER	DESCRIPTION	QTY
1	59002001000	HANDLEBAR 28MM HIGH 2000	1
12	54802013000	TWIST GRIP COVER RENTHAL 04	1
13	59402010000	THROTTLE GRIP CPL. RACING 2004	1
15	50311089200	SHORT CIRCUIT BUTTON 02	1
17	54802039000	FIXED GRIP RENTHAL 04	1
18	44011076100	CABLE TIE 100/2,5MM BLACK	x
18	44011076200	CABLE TIE 200/3,6MM BLACK	x
19	50301089000	SPACER BUSHING 6X10X5	1
30	59002030200	MASTER CYLINDER CPL. RACING 04	1
31	54602031000	CLUTCH LEVER SHORT CPL. 2003	x
31	59002031000	CLUTCH LEVER LONG CPL. 2003	1
32	59002032100	REP.KIT PISTON 9,0MM RAC. 2004	1
33	50302033100	COVER HYD.CLUTCH 2T 2000	1
34	50302034000	RUBBER FOR RESERVOIR '98	1
35	59002035000	SPRING FOR CLUTCH LEVER 03	1
36	50302036200	OIL FOR HYD. CLUTCH 75ML	1
37	50302037000	PROTECT.CAP FOR LEVER PERCH'98	1
38	50302038000	LEVER SCREW CPL. 125-200 '98	1
39	50302030150	CLAMP WITH PIN 2000	1
41	0015060203	HH COLLAR SCREW M 6X20 WS=8	1
44	0965040123	FLAT HEAD SCREW DIN0965-M 4X12	2
63	59032063100	CLUTCH PIPE RACING 2003	1
69	59411074000	STARTER CONTROL 04	1
92	59002091300	THR.CABLE"OPEN-CLOSE"KEIHIN 02	1

065900202 / C075900202

* NEW PART

X AS REQUIRED

SIDE STAND

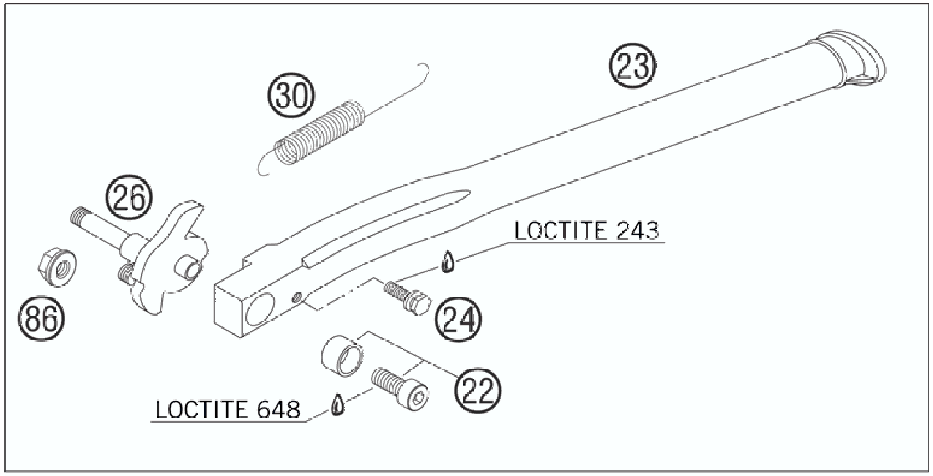

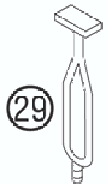

FIG	PART NUMBER	DESCRIPTION	QTY
22	50303023280	BUSHING WITH SCREW EXC USA	1
23	50303023000	SIDE STAND L=377MM '98	1
24	50303023052	BOLT SIDE ST.SPRING M5 EXC'98	1
26	50303026100	SIDE STAND BRACKET CPL. 2002	1
29	50303018000	RUBBER L=145MM	1
30	50303024000	SIDESTAND SPRING 125-380EXC'98	1
86	54310086200	SELF LOCKING NUT M8 10.9	1

065900304 / C065900304

* NEW PART

X AS REQUIRED

FRAME, SUB FRAME

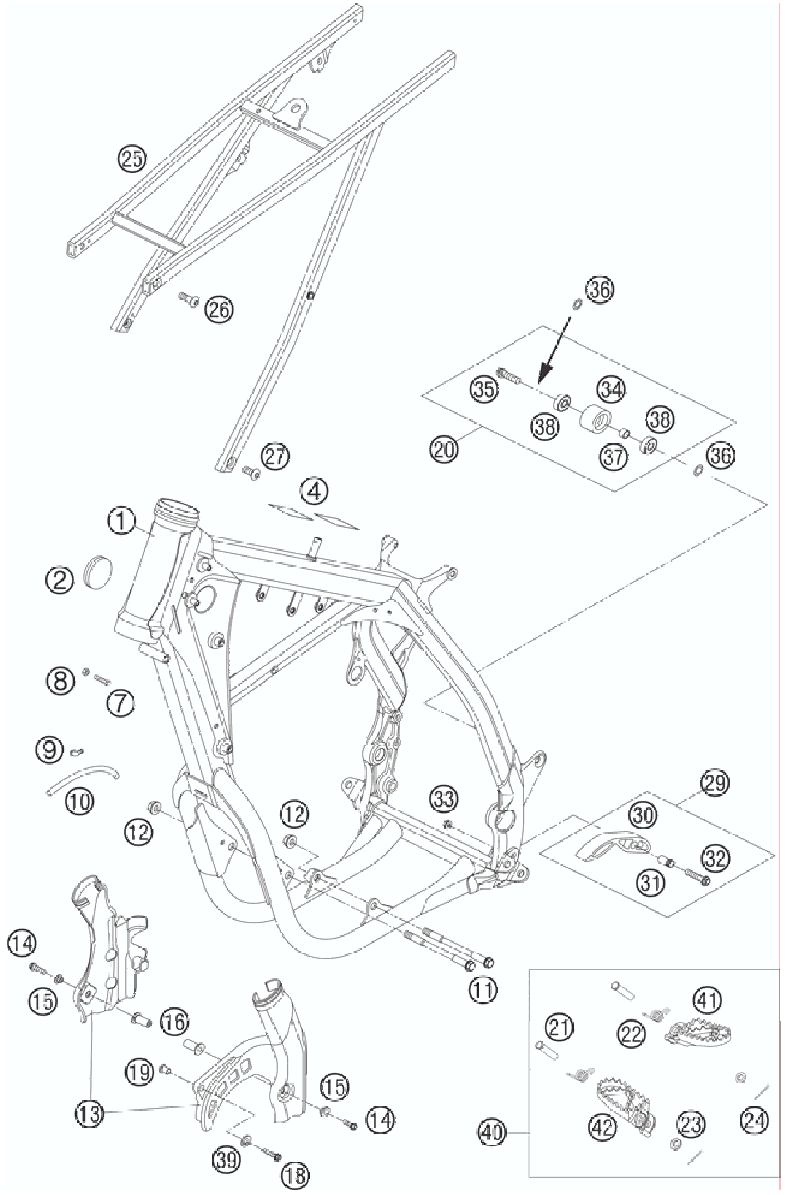

FIG	PART NUMBER	DESCRIPTION	QTY
1	5940310120030	FRAME EXC RAC.USA "DB06" 06	1
2	54606004000	PLUG 37MM	2
4	50307012000	ADH. FOIL TRANSP. 80X80 MM 04	2
7	59001037000	SPECIAL SCREW M8X26 WS=10	2
8	0934080003	HEXAGON NUT DIN0934-M 8	2
9	50303089000	ANGEL PIECE '97	2
10	55007016001	PVC-HOSE 7X10 PER METER	1
11	59003013000	ENGINEBRAC.SCREW M10X123 WS=13	2
12	54310086100	SELF LOCKING NUT M10 CU WS=14	2
13	54803094100	FRAME PROTECTION SET 05	1
14	0014050253	HH COLLAR SCREW M 5X25 WS=6	2
15	54803092060	BUSH F. FRAME PROTECTION 03	2
16	54803092050	BLIND PLUG-IN NUT M5 WN 22A 03	2
18	0015060353	HH COLLAR SCREW M 6X35 WS=8	1
19	59030060050	BUSHING F. SPROCKET COVER RAC.	1
20	50203053010	CHAIN ROLL 30MM CPL. 06	1
21	54803044000	BOLT FOR FOOT PED 03	2
22	54603041000	FOOTREST SPRING L/S & R/S	2
23	0125100003	WASHER DIN0125-A10,5	2
24	0094032253	PIN DIN0094-3,2X25 STEEL	2
25	59403002344	SUB FRAME CPL. EXC+MXC "M5" 05	1
26	54510052100	SPROCKET SCREW-AH M8X26 WS=6	2
27	54610052000	SPROCKET SCREW-AH M8X20 WS=6	2
29	51103053010	CHAIN SLIDING PIECE BELOW CPL	1
30	51103053000	CHAIN SLIDING PIECE BELOW '97	1
31	51103053051	BUSHING 8,2X10X20	1
32	0015080353	HH COLLAR SCREW M 8X35 WS=10	1
33	54310086200	SELF LOCKING NUT M8 10.9	1
34	50203053000	CHAIN ROLL D=30MM	1
35	0015080303	HH COLLAR SCREW M 8X30 WS=10	1
36	36003014000	LOCK WASHER 8MM	2
37	74003021000	BUSHING 8.2 X 12 X 6	1
38	0625006087	GROOVED BALL BEAR. 608 2RS C3	2
39	0125060003	WASHER DIN0125-A 6,4	1
40	5030314013390	FOOTREST L.+R. CPL. 03	1
41	59003040250	FOOT PED L/S SILVER 02	1

075900300 / C075900302

* NEW PART

X AS REQUIRED

FRAME, SUB FRAME

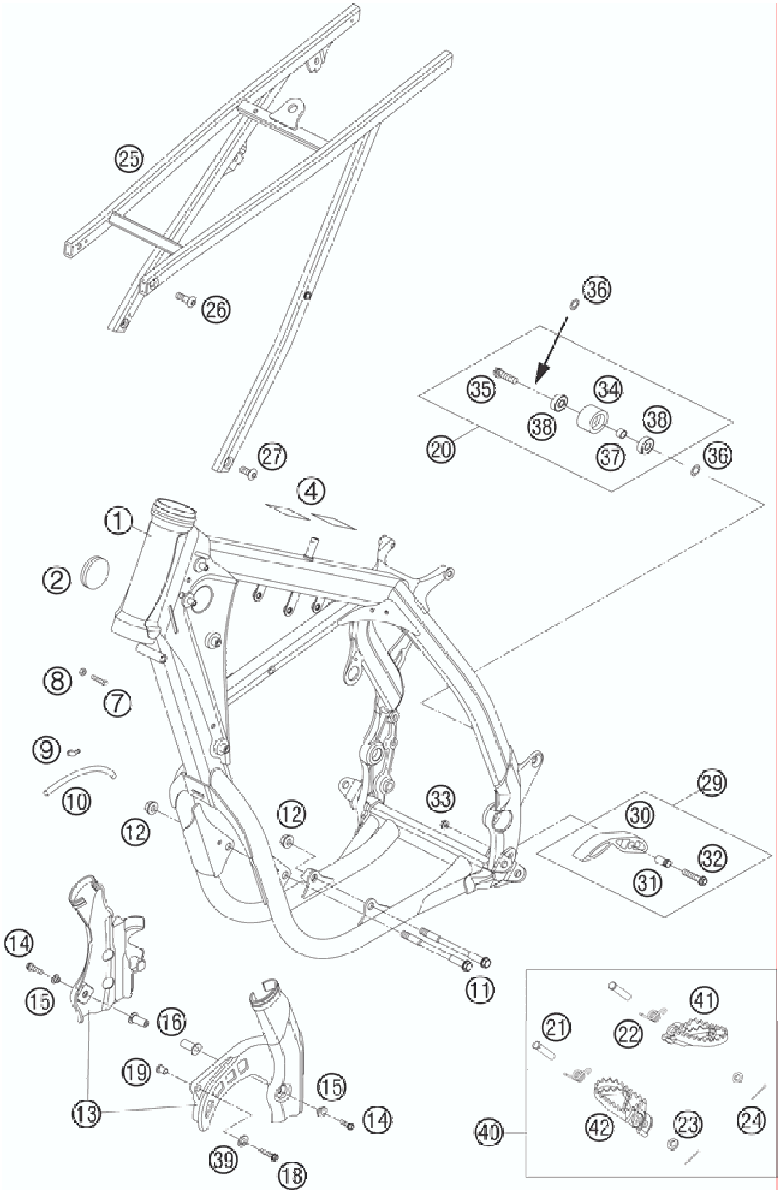

FIG	PART NUMBER	DESCRIPTION		QTY
42	59003041250	FOOT PED R/S SILVER	02	1

075900300 / C075900302

* NEW PART

X AS REQUIRED

SWING ARM

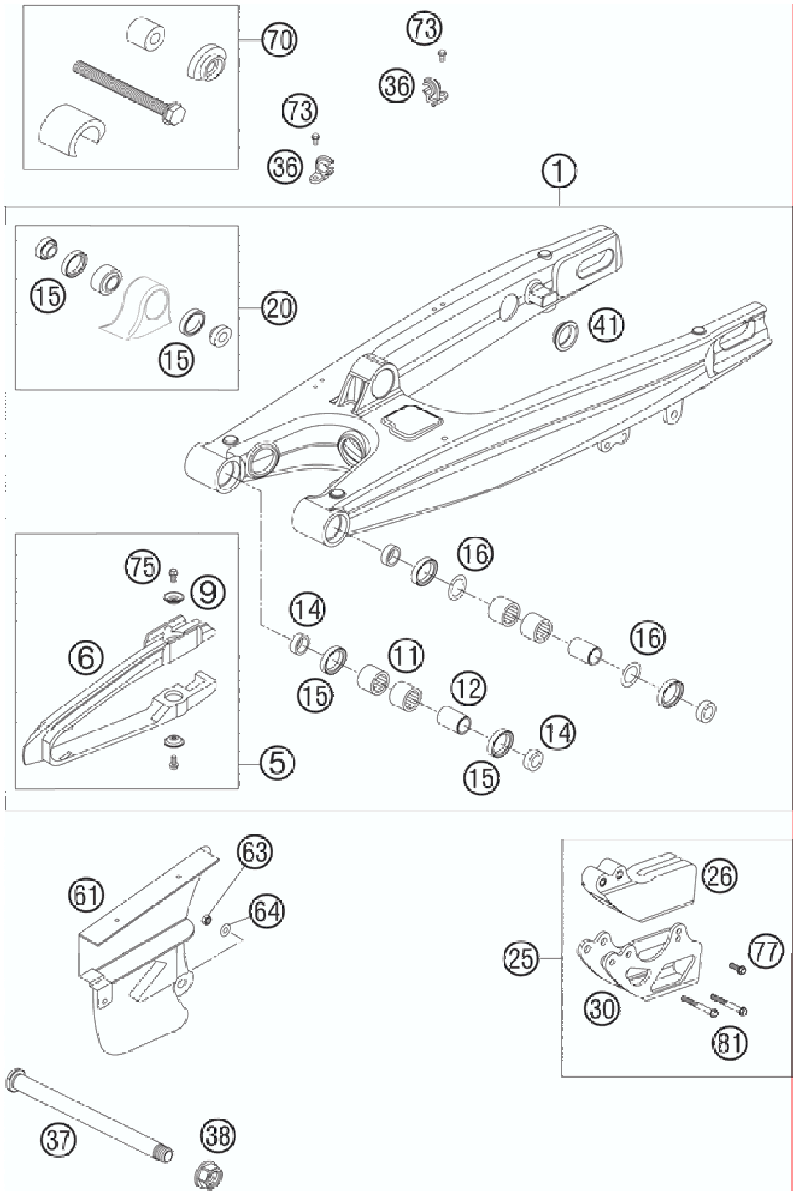

FIG	PART NUMBER	DESCRIPTION	QTY
1	59404230144	SWINGARM CPL. 05	1
5	50304066110	CHAIN GUARD CPL. 05	1
6	50304066100	CHAIN GUARD 05	1
9	72210079000	BUCKET	2
11	59004031100	NEEDLE BEARING HK2212V	4
12	59404032000	BEARING SLEEVE 17X22X38,7 03	2
14	54804034000	BUCKET F. SHAFT SEAL RING 03	4
15	0760253270	SHAFT SEAL RING 25X32X7	6
16	54603036000	STOP DISK 22,2X31,7X1	2
20	50304090044	PIVOT BEARING+BUSHES PDS '99	1
25	54607069000	CHAIN GUIDE REAR CPL.	1
26	54607066100	CHAIN GUIDE REAR '94	1
30	54607070144	RETAINING PLATE CPL.	1
36	54611076100	RETAIN.CLAMP FOR BRAKE HOSE'96	2
37*	77304037000	SWINGARM BOLT M16X1,5 07	1
38	54804038000	SELF LOCK.NUT M16X1,5 WS=19 03	1
41	58404041100	CLOSING COVER ROUND 03	5
61	50304060100	CHAIN GUARD SMALL EXC 2000	1
63	0985060003	SELF LOCK. NUT DIN0985-M 6	1
64	0021060003	WASHER DIN9021-A 6,4	1
70	50329000044	TOOL BEARING MOUNTING PDS	1
73	0009050103	SPECIAL SCREW M 5,0X10	2
75	0015060103	HH COLLAR SCREW M 6X10 WS=8	2
77	0015060163	HH COLLAR SCREW M 6X16 WS=8	1
81	0015060503	HH COLLAR SCREW M 6X50 WS=8	2

075900400 / C075900400

* NEW PART

X AS REQUIRED

MONOSHOCK

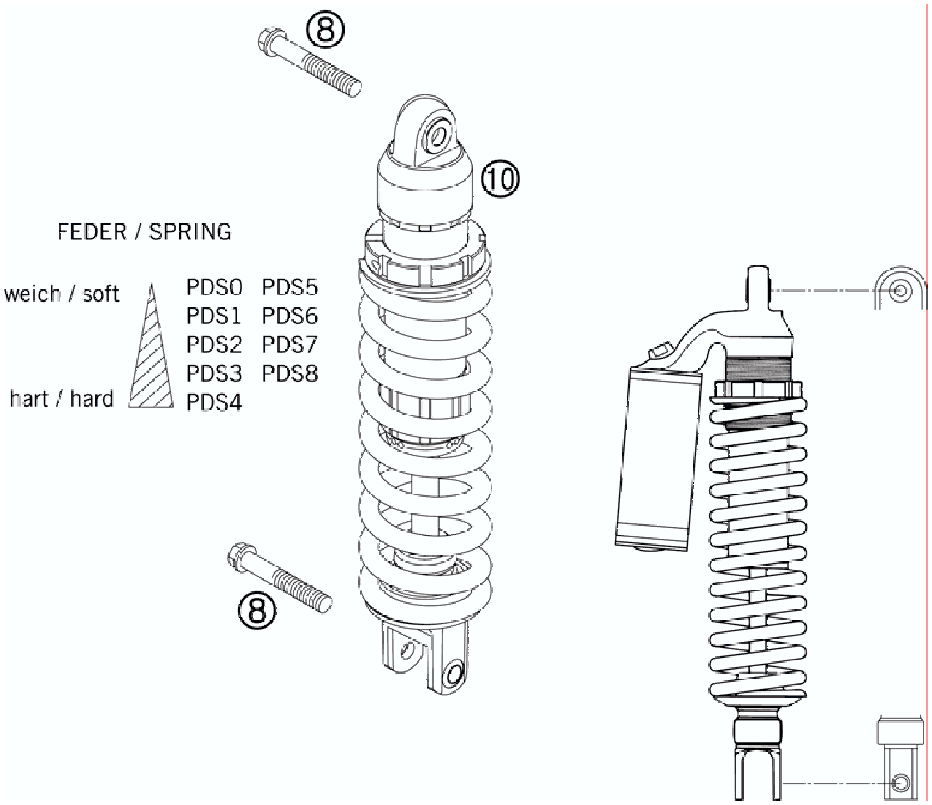

FIG	PART NUMBER	DESCRIPTION		QTY
8	0015120556S	HH COLLAR M12X55 WS=13	06	2
10*	12187C29	MONOSH.WP 450-525 XC/SD	07	1

075900403 / C075900403

* NEW PART

X AS REQUIRED

EXHAUST MANIFOLD

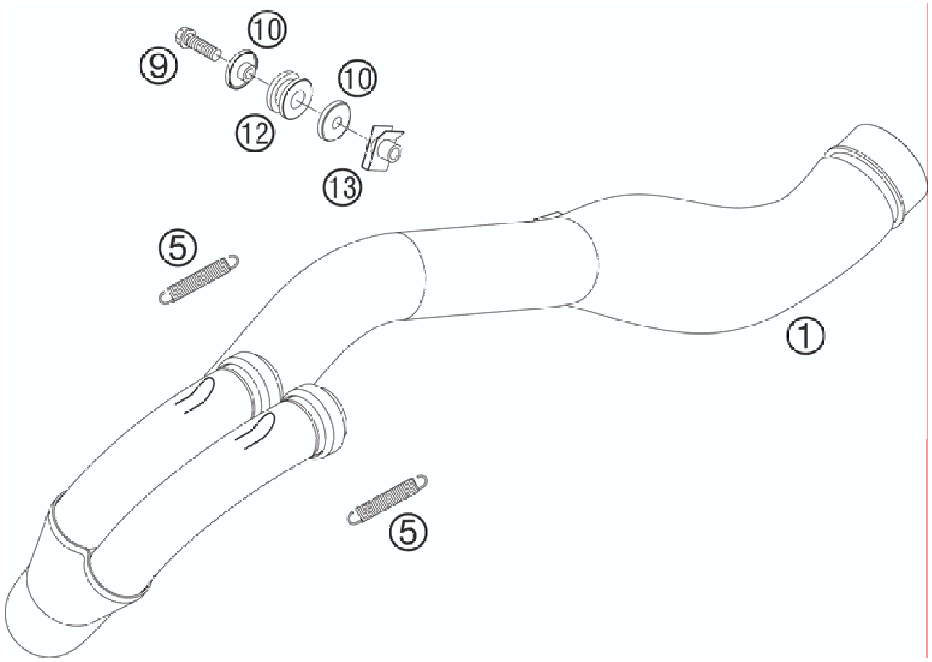

FIG	PART NUMBER	DESCRIPTION	QTY
1	59405007100	EXHAUST PIPE 450 SX 04	1
5	50305016000	TEN.SPRING L=62MM EY.MOVEABLE	2
9	0015080253	HH COLLAR SCREW M 8X25 WS=10	1
10	59405069000	BUSHING FOR EXHAUST SUPPORT 03	2
12	54605068000	EXHAUST BRACKET RUBBER BLACK	1
13	54603048000	RANGE CHANGE METAL NUT M8	1

05590050 / C065900503

* NEW PART

X AS REQUIRED

SILENCER

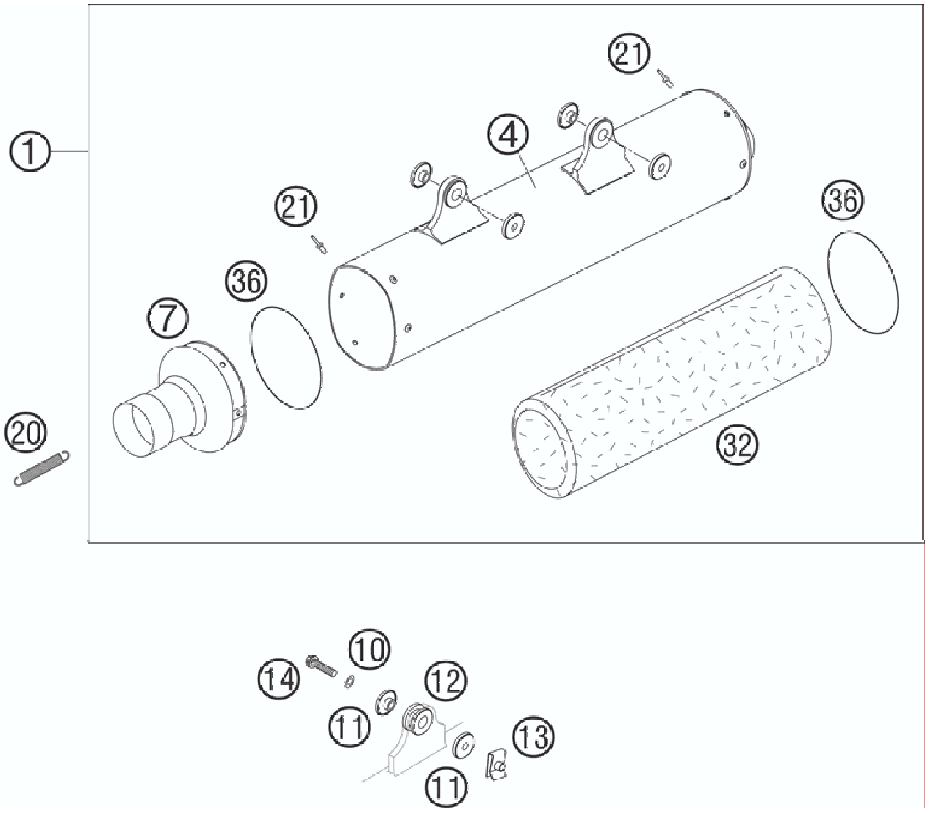

FIG	PART NUMBER	DESCRIPTION	QTY
1	77005079000	SILENCER CPL. 2005	1
4	59405079050	SILENCER HOUSING CPL. SX 03	1
7	59405079009	SILENCENER CONNECT. CAP CPL.03	1
10	0137060003	SPRING WASHER DIN0137-B 6	2
11	54605069000	BUSHING 7,5X12X28X7,8 '96	4
12	54605068000	EXHAUST BRACKET RUBBER BLACK	2
13	54603048100	RANGE CHANGE METAL NUT M6	2
14	0015060303	HH COLLAR SCREW M 6X30 WS=8	2
20	50305016000	TEN.SPRING L=62MM EY.MOVEABLE	2
21*	0011480800	DUMMY RIVET 4,8X 8 NIRO	12
32	59005078550	STUFF.YARN 550GRAMM L=550MM SX	1
36	0770740015	O-RING 74,00X1,50 FKM 75SH	2

05590051 / C075900502

* NEW PART

X AS REQUIRED

AIR FILTER BOX

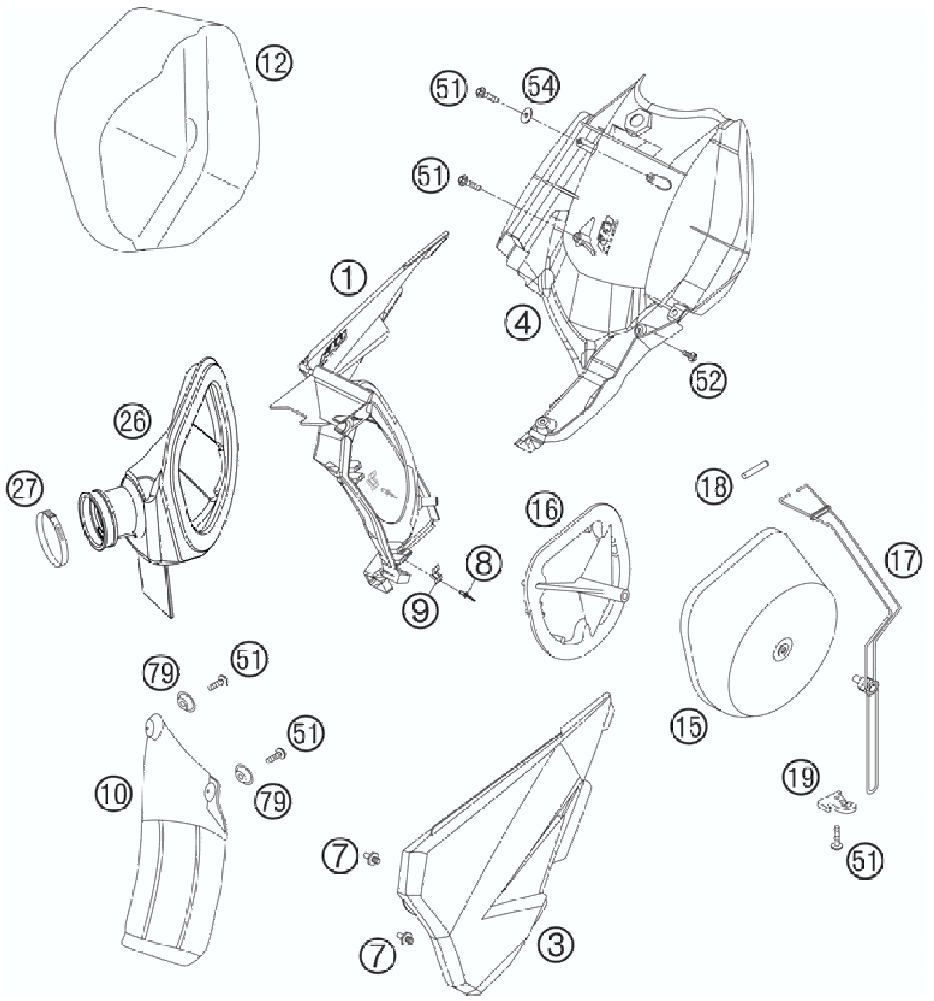

FIG	PART NUMBER	DESCRIPTION	QTY
1	54806001051	FILTER WALL 03	1
3	54806003000	FILTER BOX COVER 03	1
4	54806001052	REAR PART FILTER BOX 03	1
7	54806008051	QUICK RELEASE-NIPPLE 03	2
8*	54806108052	BLIND RIVET 3,3X9,7 GROOVED 04	4
9	54806008050	QUICK RELEASE-SPRING HANGER	2
10	50306010000	FENDER FOR FILTER BOX '98	1
12	50306012000	THROTTLE CAP 125-380EGS CPL.98	x
15	59006015000	AIR FILTER RACING 2001	1
16	59006016000	FILTER CARRIER RAC. 2001	1
17	50306017000	FILTER SUPPORT CPL.2-STROKE'98	1
18	50306018000	FILTER SUPPORT BUSH 125-380'98	1
19	50306019000	FASTEN. DEVICE FILTER SUPPORT	1
26	59406026000	CARBURETOR CONNECTION BOOT	1
27	46005058000	HOSE CLAMP 40-60MM	1
51	0017060203	EJOT PT SCREW K60X20 WS=6	6
52	0009050103	SPECIAL SCREW M 5,0X10	1
54	0021060003	WASHER DIN9021-A 6,4	2
79	72210079000	BUCKET	2

065900600 / C075900600

* NEW PART

X AS REQUIRED

FUEL TANK, SEAT

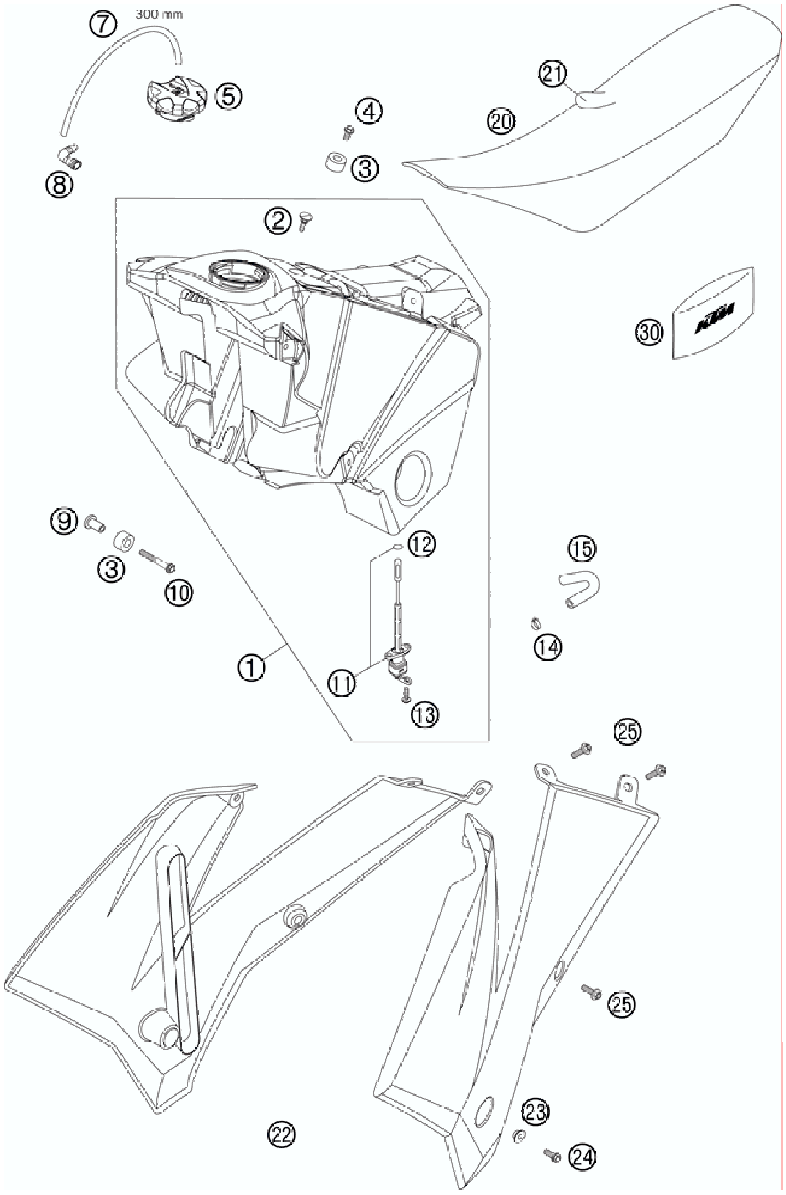

FIG	PART NUMBER	DESCRIPTION	QTY
1	5940701300044	FUEL TANK CPL.RAC 10L USA 06	1
2	50307011000	SCREW SEAT FASTENING D=6X23/18	1
3	50307014000	TANK ROLLER 12X26X12 '98	3
4	0015060123	HH COLLAR SCREW M 6X12 WS=8	1
5*	77007008044	FILLER CAP CPL. 05	1
7	31007107001	PVC-HOSE 6X9 MM PER METER	x
8	51030022000	ANGLE PIECE 90 DEGREE M10X1	1
9	59003001055	SUPORT BUSHING TANKROLLER	2
10	0015060453	HH COLLAR SCREW M 6X45 WS=8	2
11	54807004000	GAS COCK ON/OFF/RES 03	1
12	0770110021	O-RING 11X2 VITON	1
13	0017060203	EJOT PT SCREW K60X20 WS=6	2
14	58031005000	CLAMP YDNAC 10128 12MM	2
15	59007016000	FUEL HOSE 7,5X13MM	1
20	54807040400	SEAT BLACK WITHOUT KTM-LOGO 05	1
21	54807040450	SEAT COV.BLACK WITHOUT LOGO 05	1
22	5480805000004	SPOILER L/S ORANGE 05	1
22	5480805100004	SPOILER R/S ORANGE 05	1
23	50308052000	BUSH FOR SPOILER 6X11X16X5 MM	2
24	0015060203	HH COLLAR SCREW M 6X20 WS=8	2
25	0017060204	EJOT PT SCREW K60X20 ALU WS=6	8
30*	77029099100	TOOL KIT 07	1

075900702 / C075900702

* NEW PART

X AS REQUIRED

MASK, FENDERS

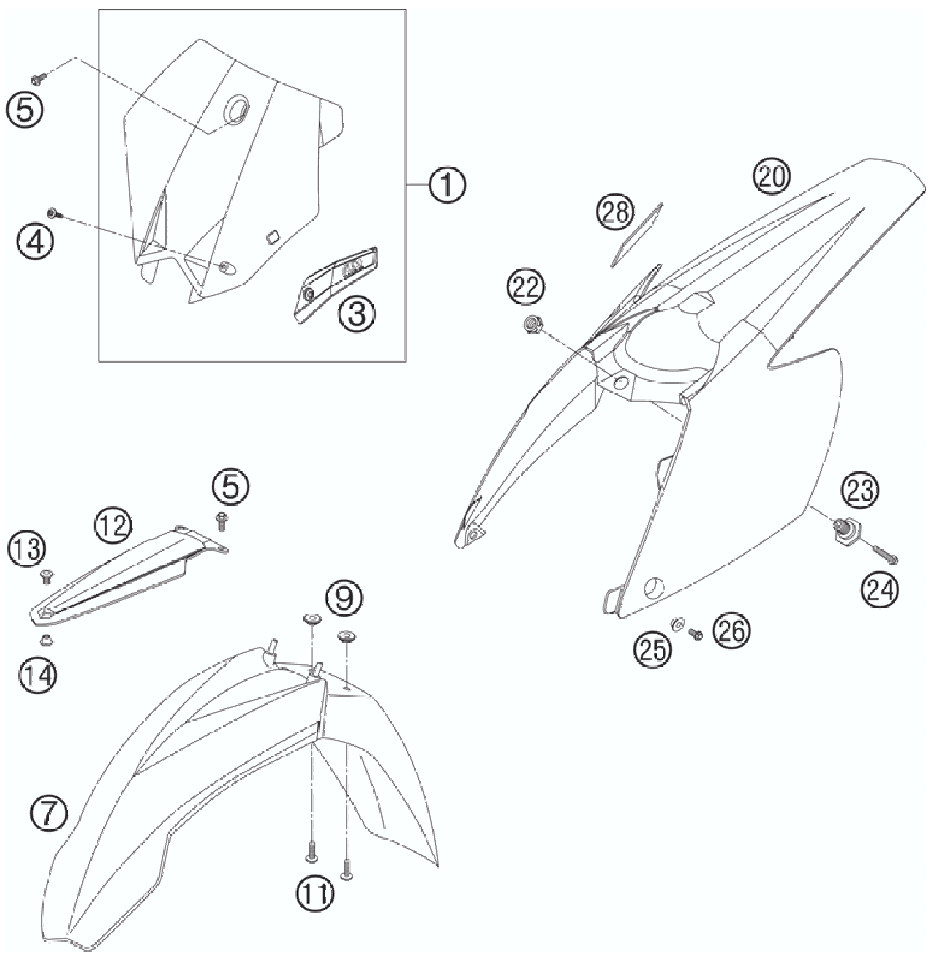

FIG	PART NUMBER	DESCRIPTION	QTY
1	5480800701004	NUMBER PLATE CPL. ORANGE 03	1
3	54808019000	BRAKE HOSE GUIDE BLACK 03	1
4	0017060204	EJOT PT SCREW K60X20 ALU WS=6	1
5	0014060153	HH COLLAR SCREW M 6X15 WS=8	3
7	5030801030004	FENDER FRONT WIDE ORANGE 03	1
9	54808020000	SPACER BUSHING 03	4
11	0014060203	HH COLLAR SCREW M 6X20 WS=8	4
12	50308009100	FENDER BRACE BLACK '99	1
13	50308009050	SCREW FEND.BRACE M8X9 WS=17	1
14	50308009051	NUT FENDER BRACE M8 WS=17	1
20	5480801300004	REAR PART SX ORANGE 03	1
22	50314057050	COLLAR NUT M12X1/WS17 H=5MM	1
23	54807048000	BUSHING FOR SEAT FASTENING 03	1
24	0015060253	HH COLLAR SCREW M 6X25 WS=8	1
25	50308052000	BUSH FOR SPOILER 6X11X16X5 MM	2
26	0015060163	HH COLLAR SCREW M 6X16 WS=8	2
28	59003001099	METAMOLL 90X45X3MM 03	1

065900800 / C075900800

* NEW PART

X AS REQUIRED

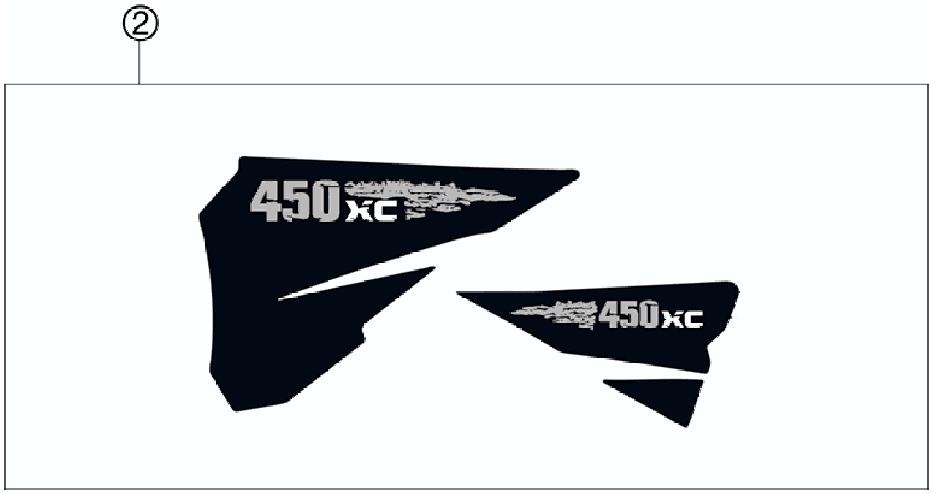

FIG	PART NUMBER	DESCRIPTION	QTY
1*	52308290200	SPOILER DECAL 2007	1
2*	59408292200	DISPLACEMENT DECAL 450 XC 07	1

075900815 / C075900815

* NEW PART

X AS REQUIRED

FRONT WHEEL

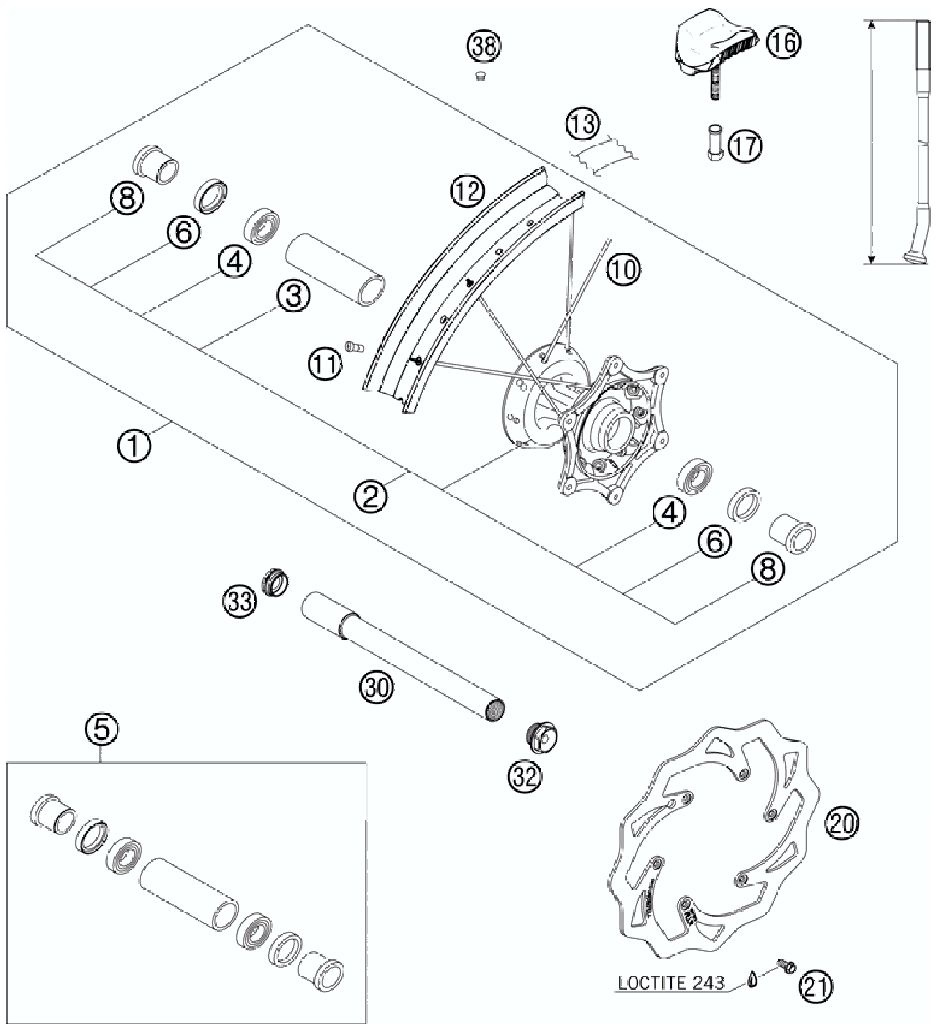

FIG	PART NUMBER	DESCRIPTION	QTY
1*	5480900184430	FRONTWHEEL CPL.1,6X21 EXCEL 07	1
2	5480901004491	FRONT HUB CPL. SX SILVER 03	1
3	54809011000	BEA.SPACERTUBE 35X2 L=79,4 03	1
4	0625069068	GR.BALL BEAR.6906 DDU2CG23S6NM	2
5	54809015000	FRONT WHEEL REP. KIT	1
6	0760354771	SHAFT SEAL RING 35X47X7 TC	2
8	54809012000	SPACER BUSHING F. FR. WHEEL 03	2
10	50309072228	SPOKE M4,5X228-15G 21" DDE	36
11	50309072000	SPOKE NIPPLE M4,5X0,75 8X21	36
12*	5480907000030	FRONT RIM 1,6X21" EXCEL AL7	1
13	50309073000	RIM BAND 21"	1
16	51009100100	RIM LOCK VM1 (1,60")	1
17	50310090050	NUT FOR WHEEL HOLDER '96	1
20*	77309060000	BRAKE DISC FRONT 260	1
21	59009062013	SPECIAL SCREW M6X13 WS=8 10.9	6
30*	77309081000	WHEEL SPIN.FR. D=26 M24x1,5 07	1
32	54809082000	SPINDLE SCREW M24X1,5 WS=27 03	1
33	54809081050	PLUG BUSHING WS=27 03	1
38	55003135000	PLUG FOR RIM	x

075900901 / C075900901

* NEW PART

X AS REQUIRED

REAR WHEEL

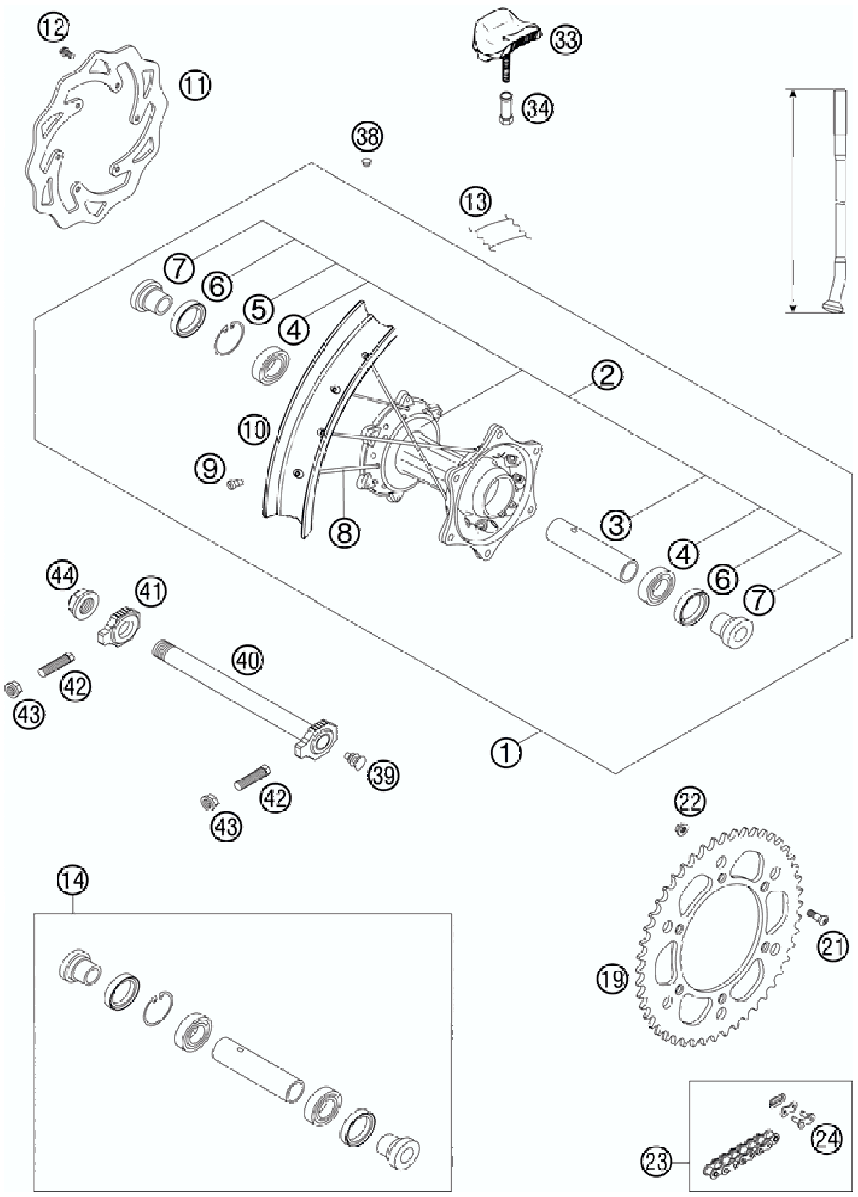

FIG	PART NUMBER	DESCRIPTION	QTY
1*	5481010104430	R. WHEEL CPL.2,15X18" EXCEL 07	1
2	5481001004491	REAR WHEEL HUB CPL. SX, EXC 03	1
3	59010011000	BUSHING SPACER TUBE 121,5MM 01	1
4	0625060058	GR.BALL BEAR.6005 DDU2CG23S6NM	2
5	0472047175	CIRCLIP DIN0472-47X1,75	1
6	0760324771	SHAFT SEAL RING 32X47X7 BSL	2
7	54610016000	BUSHING FOR HUB	2
8	50310072195	SPOKE M5X195-10G 18" DDE	36
9	58309072000	SPOKE NIPPLE M5-TA (8X21MM)	36
10*	5481007000030	REAR RIM 2,15X18" EXCEL AL7	1
11*	77310060000	BRAKE DISC REAR 220	1
12	59009062013	SPECIAL SCREW M6X13 WS=8 10.9	6
13	50310073200	RIM BAND 18" AND 19"	1
14	54810015000	REAR WHEEL REP. KIT	1
18	58310051038	REAR SPROCKET 38-T	x
18	58310051042	REAR SPROCKET 42-T	x
18	58310151040	REAR SPROCKET 40-T	x
18	58310151045	REAR SPROCKET 45-T	x
19	58310151048	REAR SPROCKET 48-T	x
19	58310151049	REAR SPROCKET 49-T	x
20	58310151050	REAR SPROCKET 50-T	x
20	58310151051	REAR SPROCKET 51-T	x
20	58310151052	REAR SPROCKET 52-T	x
21	54510052100	SPROCKET SCREW-AH M8X26 WS=6	6
22	54310086200	SELF LOCKING NUT M8 10.9	6
23	50310165118	CHAIN 5/8X1/4" + MASTER LINK 118 ROLLS	1
23	50310800118	CHAIN Z-RING 118 ROLLS 05 118 ROLLS	1
24	50310166000	CONNECTING LINK	1
24	50310266000	CONNECTING LINK X-RING	1
33	54010100100	RIM LOCK VM3 (2.15")	2
34	50310090050	NUT FOR WHEEL HOLDER '96	2
38	55003135000	PLUG FOR RIM	x
39	50210086000	COVERING CAP SFL16	x
40*	77310085044	WHEEL SPINDLE RE. CPL.265MM 07	1

075901001 / C075901001

* NEW PART

X AS REQUIRED

REAR WHEEL

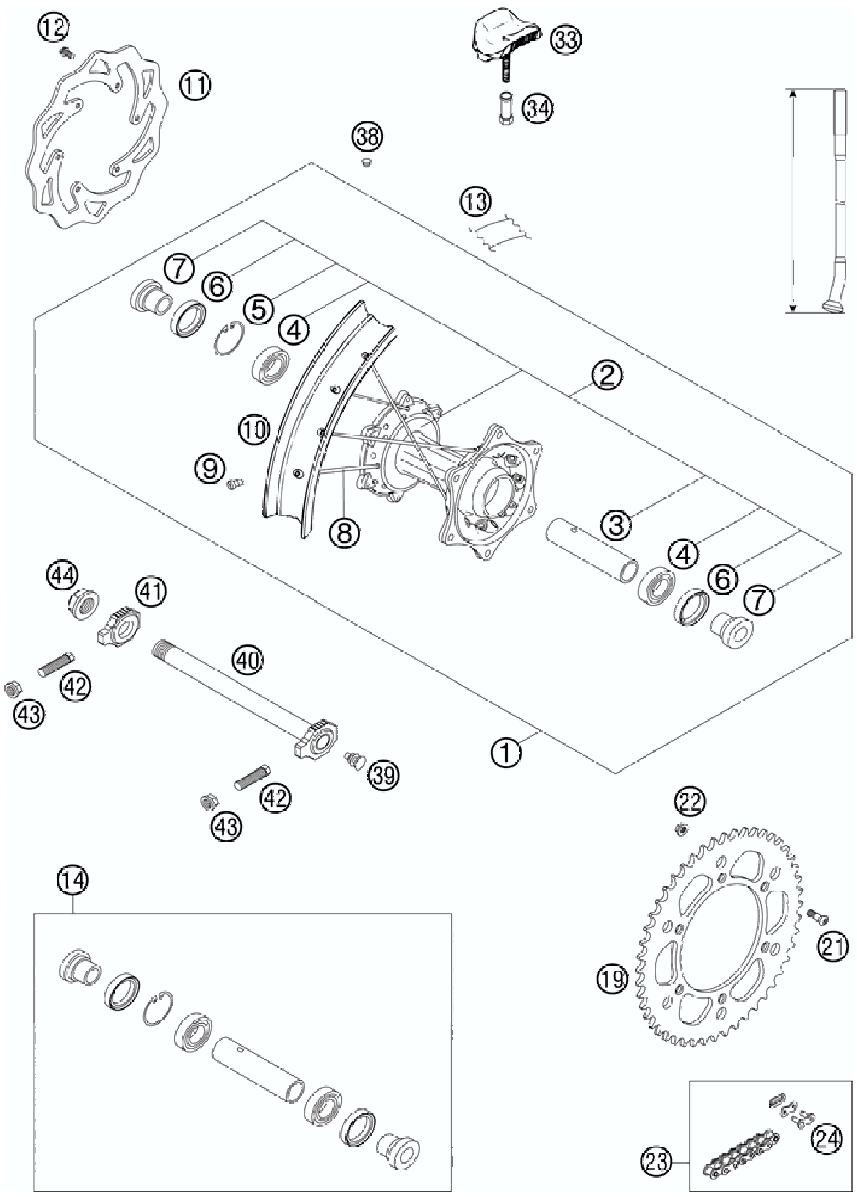

FIG	PART NUMBER	DESCRIPTION	QTY
41	50310084000	CHAIN TENSIONER R/S 2000	1
42*	50304040100	SCREW M10X1,25X50 WS=10	2
43	58414030000	HH COLLAR NUT M10X1,25 WS=13	2
44	50310099000	HEXAGON NUT M20X1,5 '98	1

075901001 / C075901001

* NEW PART

X AS REQUIRED

WIRING HARNESS

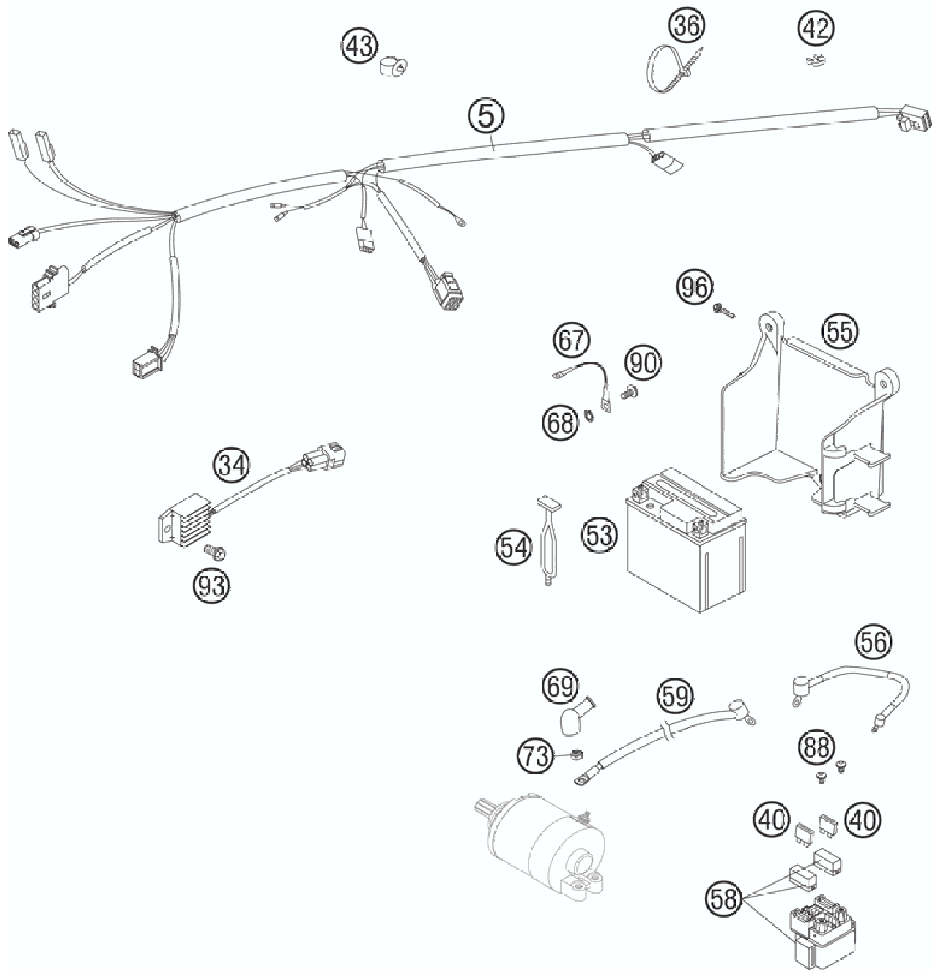

FIG	PART NUMBER	DESCRIPTION	QTY
5	59411075100	WIRING HARNESS RACING USA 05	1
34	80011034000	VOLTAGE REGULATOR 04	1
36	44011076200	CABLE TIE 200/3,6MM BLACK	x
36	44011076305	CABLE TIE 300/4,8MM BLACK	x
40	58011109110	FUSE 10 A 2000	2
42	57013072100	WIRING HOLDER 16MM	x
43	58111076000	CABLE SUPPORT KHS NR.150-47610	2
53	58511053000	BATTERY 12V 4(5)AH TX5L-BS	1
54	50303018000	RUBBER L=145MM	2
55	59011055100	BATTERY CARRIER PLAST.BLACK 05	1
56	58711086000	WIRING HARNESS BATTERY DUKE'99	1
58	58211058000	STARTER RELAY 12V '99	1
59	58411059100	STARTERCABLE 700 MM '97	1
67	58411097100	GROUND CABLE D=6MM L=140MM '97	1
68	58411098100	CONTACT WASHER M6 VSV-K6	1
69	58440099000	PROTECTION CAP F. STARTER ENG.	1
73	0985060003	SELF LOCK. NUT DIN0985-M 6	1
88	0902060083	AH OVAL SCREW ISO 7380 M 6X8	2
90	0014060103	HH COLLAR SCREW M 6X10 WS=8	1
93	0015060123	HH COLLAR SCREW M 6X12 WS=8	1
96	0017060203	EJOT PT SCREW K60X20 WS=6	3

065901101 / C065901101

* NEW PART

X AS REQUIRED

REAR BRAKE CALIPER

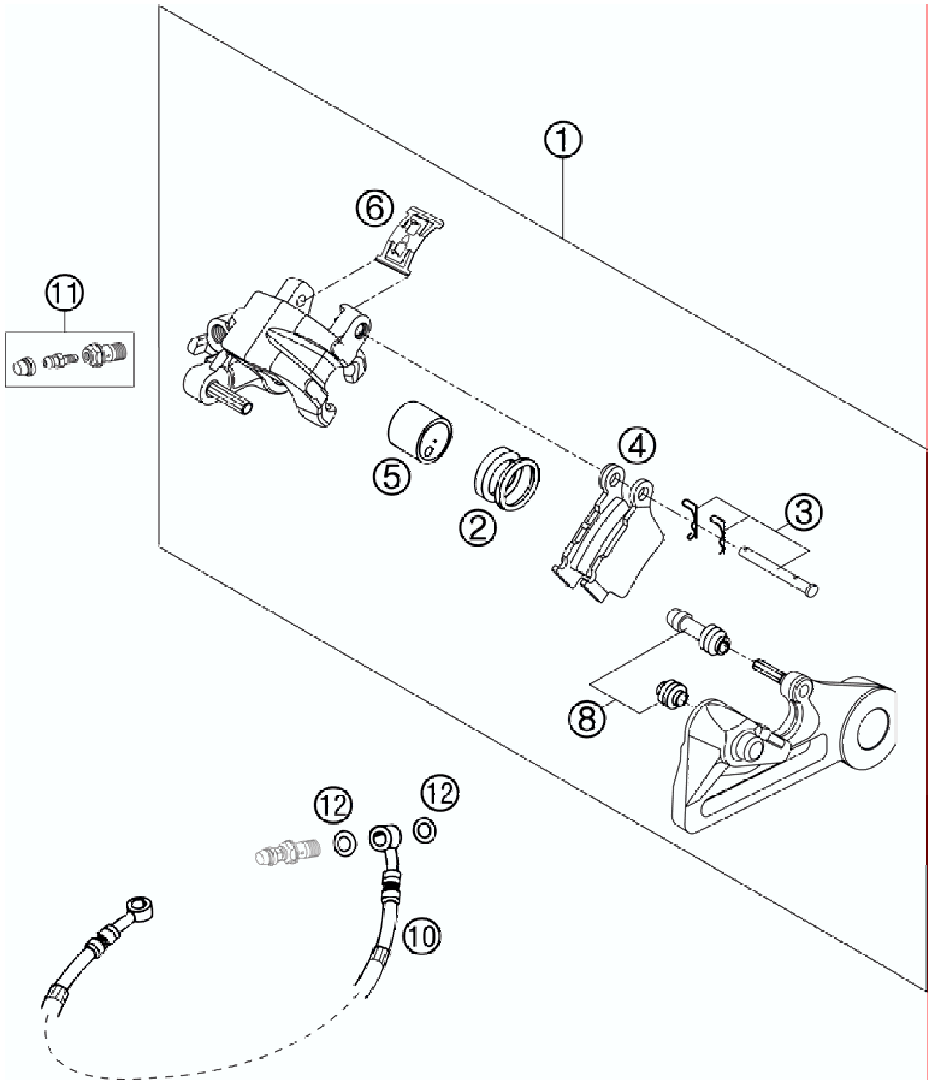

FIG	PART NUMBER	DESCRIPTION	QTY
1	54813080144	BRAKE CALIPER REAR CPL. 2005	1
2	50313081200	REPAIR KIT SEALING RINGS 26MM	1
3	54813082000	BOLT SET FOR BRAKE CALIPER 03	1
4	54813090300	BRAKE PAD SET REAR TOYO	1
5	54813083000	BRAKE PISTON 26MM 2003	1
6	54813018000	RETAINING SPRING SET 2003	1
8	54613218000	CUP SET SHORT	1
10	54813070000	BRAKE HOSE REAR 655MM 03	1
11	54813020000	BLEEDER HOLLOW SCREW M10X1	1
12	42013226000	CU-SEAL RING DIN7603-10X16X1	2

03590136 / C065901304

* NEW PART

X AS REQUIRED

HAND BRAKE CYLINDER

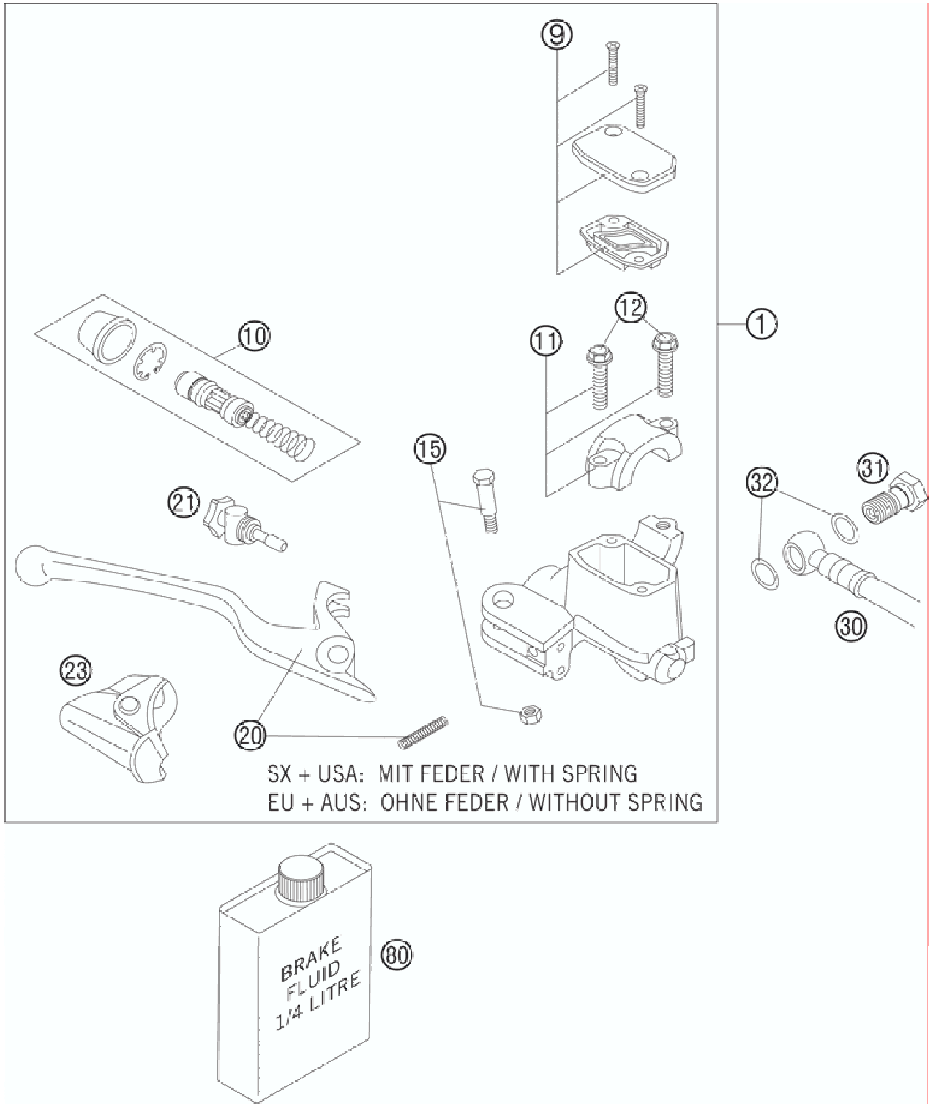

FIG	PART NUMBER	DESCRIPTION	QTY
1	54813001200	HAND BRAKE CYLINDER CPL. SX 06	1
9	50313003000	HANDBRAKE CYL.COVER CPL.NATURE	1
10	54813008200	REP.SET PISTON D=10MM 2006	1
11	50313005000	CLAMP CPL. NATURE	1
12	0015060253	HH COLLAR SCREW M 6X25 WS=8	2
15	50313006100	LEVER SCREW CPL. 2001	1
20	54813002000	HAND BRAKE LEVER + SPRING 2005	1
21	54813007000	ADJUSTING SCREW CPL. SX 2005	1
23	50313004000	PROTECTION CAP HAND BRAKE CYL.	1
30	59013010000	BRAKEHO. FRONT 1235MM 2000	1
31	50213025000	HOLLOW SCREW M10X1X19	1
32	42013226000	CU-SEAL RING DIN7603-10X16X1	2
80	306054	BRAKE FLUID DOT 4.0	1

065901300 / C075901300

* NEW PART

X AS REQUIRED

BRAKE CALIPER FRONT

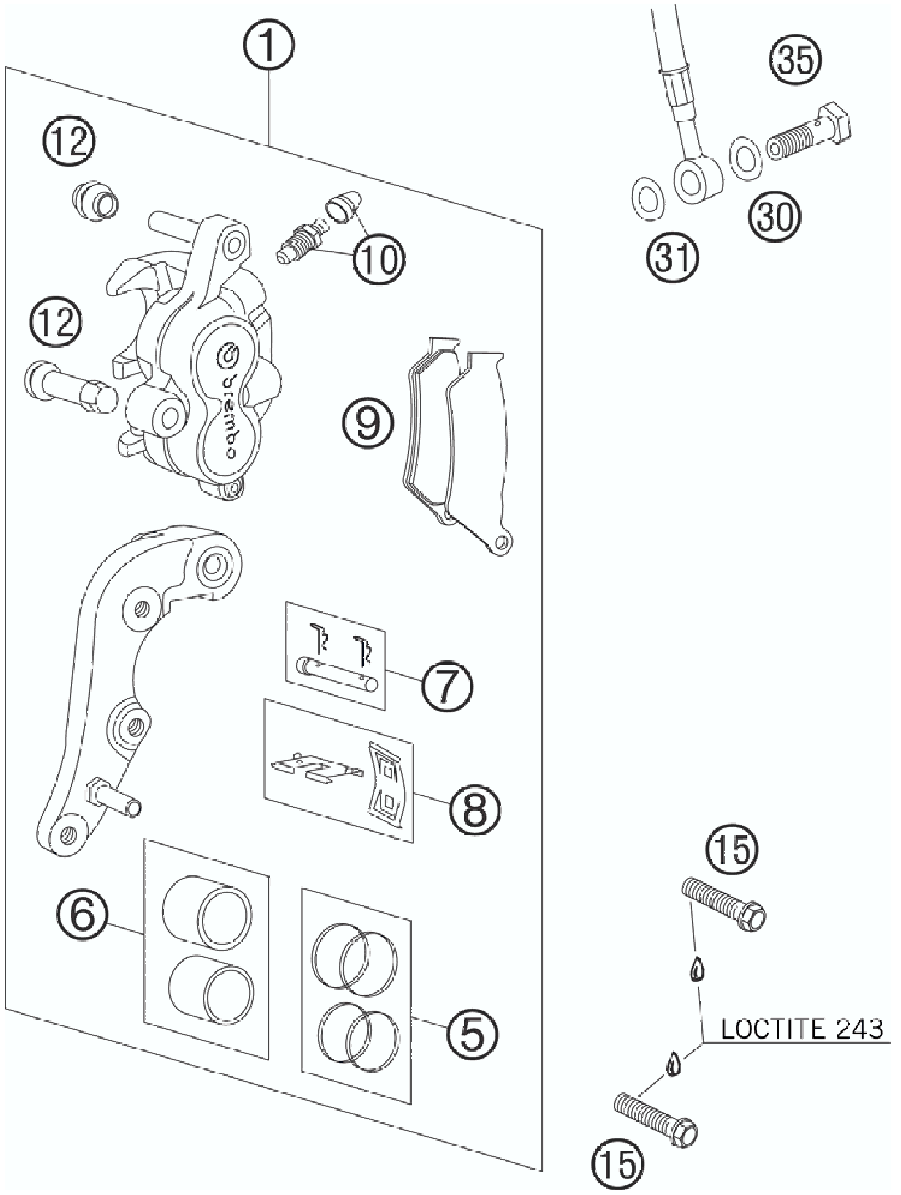

FIG	PART NUMBER	DESCRIPTION	QTY
1	59013015144	BRAKECALIPER FRONT BREMBO 2000	1
5	54613205000	REPAIR KIT 28MM	1
6	54613206000	REPAIR KIT PISTON 28MM	1
7	54613210100	BOLT CPL. 6X56	1
8	54613212000	RETAINING PLATE SET BREMBO	1
9	50313030100	BRAKEP.SET FR.TOSHIBATT2701HHB	1
10	60013020000	BLEEDER SCREW WITH CAP	1
12	54613218000	CUP SET SHORT	1
15	0015080353	HH COLLAR SCREW M 8X35 WS=10	2
30	42013226000	CU-SEAL RING DIN7603-10X16X1	1
31	42013026000	CU-SEAL RING DIN7603-10X16X1,5	1
35	50213025000	HOLLOW SCREW M10X1X19	1

065901303 / C075901303

* NEW PART

X AS REQUIRED

REAR BRAKE CONTROL

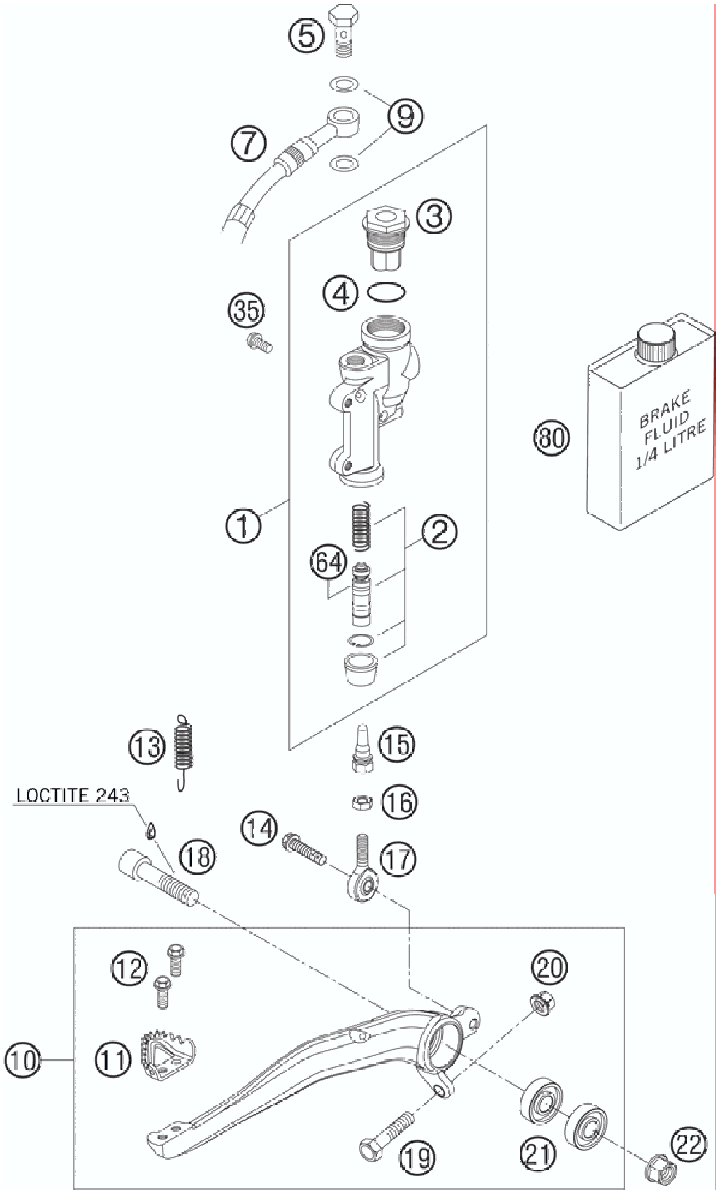

FIG	PART NUMBER	DESCRIPTION	QTY
1	54813060100	REAR BRAKE CYLINDER CPL. 2004	1
2	54813061200	REPAIR KIT PISTON 13MM 06	1
3	54813062100	REAR BRAKE CYL. COVER CPL. 04	1
4	54813063000	FOOT-BRAKE CYL. GASKET SX 03	1
5	54813020100	HOLLOW SCREW BLACK M10X1X19	1
7	54813070000	BRAKE HOSE REAR 655MM 03	1
9	42013226000	CU-SEAL RING DIN7603-10X16X1	2
10	54813050044	FOOT BRAKE LEVER CPL. 03	1
11	54813051000	STEP PLATE FOR BRAKE LEVER	1
12	0015050123	HH COLLAR SCREW M 5X12 WS=8	2
13	54603062000	RETURN SPRING FOR BRAKE LEVER	1
14	0015060203	HH COLLAR SCREW M 6X20 WS=8	1
15	54813056000	PUSH ROD L=28MM 03	1
16	0934060003	HEXAGON NUT DIN0934-M 6	1
17	54813055000	SWIVEL HEAD KA6 03	1
18	0912100406	AH SCREW DIN6912 M10X40 10.9	1
19	59001037000	SPECIAL SCREW M8X26 WS=10	1
20	46030045000	COLLAR NUT M8 WS=10	1
21	0625060002	BALL BEARING SKF 6000-2RS1	2
22	54630044000	COLLAR NUT M10 WS=13	1
35	0015060123	HH COLLAR SCREW M 6X12 WS=8	2
64	54813064200	BELLOWS FOR REPAIR KIT 06	1
80	306054	BRAKE FLUID DOT 4.0	1

065901305 / C075901305

* NEW PART

X AS REQUIRED

FIG	PART NUMBER	DESCRIPTION	QTY
0	312305	DOCUMENTS BAG 2006	1
0	312313	KTM BALLPOINT ORANGE	1
0	3210039	CUSTOMER WELCOME LETTER	1
0	3211145	OWNERS MANUAL 250-525 RAC. 07	1
0	3CF8475G1EN	SPC CHASSIS 450 XC USA 07	1
0	3CM089232GEN	SPC MOTOR 450 XC-G 07	1

070002000 / C075902001

* NEW PART

X AS REQUIRED

KTM Group Partner

3CF8475G1EN

Art.Nr.: 3CF8475G1EN 5/2006

KTM-Sportmotorcycle AG

A-5230 Mattighofen

www.ktm.at